DRY50 LINEAR FLAT

TECHNICAL DATA SHEET

revestech®

CE

EAD 030436–00–0503

Product

Linear channel kit, with **DRY50** membrane heat sealed to the low thickness FLAT drain.

Description

Waterproofing membrane with drain and waste with trap for shower (convertible to no trap).
It includes HORIZONTAL outlet of 40/50 mm.
Grid and channel finished in stainless steel AISI 304. The new system of sealing the membrane to the drain in the manufacturing process provides a guaranteed waterproof bond to the drain, avoiding problems during the installation. Also it allows to rotate 360° the waste itself, to facilitate connection to the drain pipe.

Membrane

Features	Test Method	Unit	Tolerance	Valor
Water tightness	EN 1928 Meth. B			PASS
Tensile strength	EN 12311–2 Meth. A	N/50 mm	MLV L ≥ 395 MLV T ≥ 130	L=395 T=130
Elongation	EN 12311–2 Meth. A	%	MLV L ≥ 23 MLV T ≥ 190	L=23 T=190
Overlap resistance	EN 12317–2	N/50 mm	MLV ≥ 110	110
Impact resistance	EN 12691	mm		PND
Static load resistance	EN 12730 Meth. B	Kg	MLV ≥ 20	=20
Pliability at low temperature	EN 495–5	°C	MLV ≥ 40	-40
Reaction to fire	EN 13501–1	Euroclases		F
Length	EN 1848–2	m	-0% and +5%	2
Width	EN 1848–2	m	-0,5% and +1%	1,2 and 1,5
Weight	EN 1849–2	g/m²	-5% and +10%	335
Specific weigth	EN 1849–2	mm	-5% and +10%	0,52
Visible defects	EN 1850–2			PASS
Straightness	EN 1848–2	mm	g ≤ 50	g=50
Flatness	EN 1848–2	mm	p ≤ 10	p=10
Dimensional stability	EN 1107–02	%		L=-0,2 T=0
Effects of chemicals	EN 1847	Values do not change after 28 days in saturated calcium hydroxide solution at 23°C		
Resistance to diffusion water vapour	UNE-EN 1931:2001	m²·h·Pa/mg		9,75

MLV: Manufacturer's Limiting Value. NPD: No Performance Determined.

Further features	Test Method	Unit	Tolerance	Value
Water resistance of overlap cementitious adhesive C2	Water column	1m/24 h		WATERTIGHT
CAdhesion of adhesive cementitous C2 on the membrane sheet: tensile	Metodología CSTB	N/mm²	±10%	0,9
Adhesion of adhesive cementitous C2 on the membrane sheet: shear stress	Metodología CSTB	N/mm²	±5%	1,28
Impact strenght with ceramic coating	Metodología CSTB	Number of shocks		4

Storage

Store in original unopened packing, protect from moisture, in place properly ventilated at a maximum temperature of 30°C.
Protect from direct sunlight.

DRY50 LINEAR FLAT
TECHNICAL DATA SHEET

revestech®

WASTE AND CHANNEL

Features	Test Method	Unit	Value
Waste height		mm	65
Waste outlet		mm	Ø Horizontal 40/50
Flow rate		mm	50
Discharge capacity	ISO TC 138/SC 1604	l/s	0,50
Grid dimensions		mm	See next page
Effects of chemicals	Stable with products normally used with ceramic tiles, cleaning and maintenance.		
Composition	**Waste:** ABS **Channel and grid:** Stainless steel AISI 304 electro-polished finish.		

Union membrane / waste: heat sealed

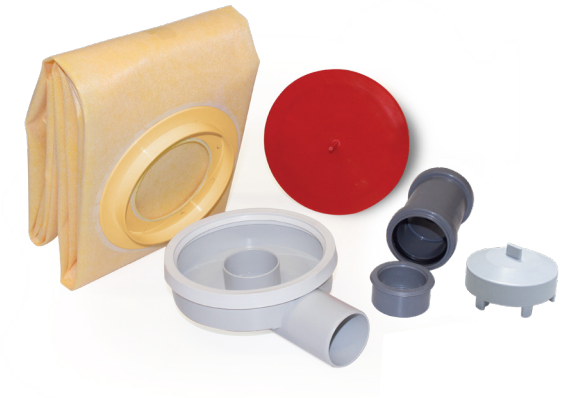

WASTE MEASURES

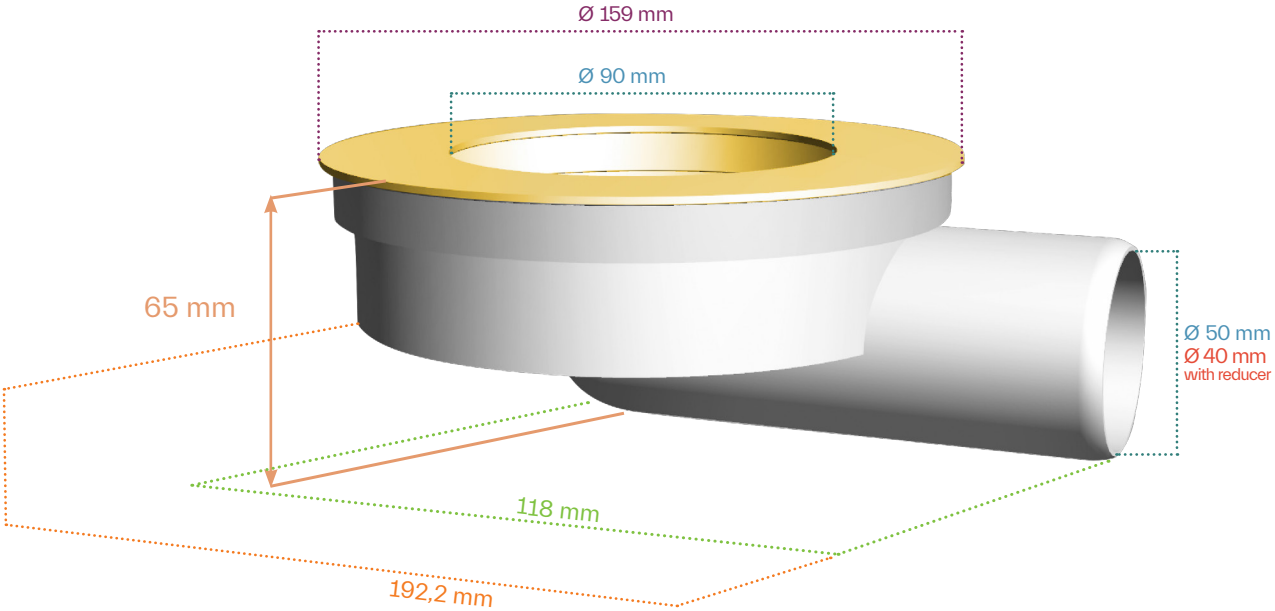

responsible waterproofing

DRY50 LINEAR FLAT

TECHNICAL DATA SHEET

revestech®

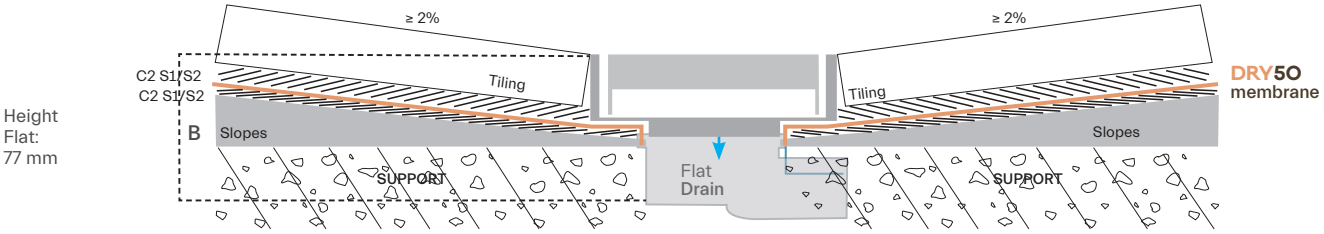

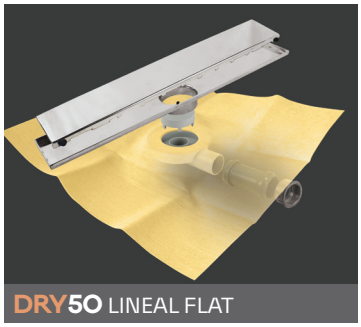

Linear channel kit, with **DRY50** membrane heat sealed to the low thickness FLAT drain.

Height
65 mm.

Outlets
Horizontal
Ø 40/50

Drain location in **DRY50** membrane.

● **Vertical off-centre** version

* **Horizontal off-centre** version

Reference	Description	Grating length	Membrane dimensions
544011028	•DRY50 LINEAR FLAT 60 steel	60 cm	1,2 x 2 m
544011110	•DRY50 LINEAR FLAT 60 chrome		
544011035	•DRY50 LINEAR FLAT 60 squares		
544011066	•DRY50 LINEAR FLAT 70 steel	70 cm	1,5 x 2 m
544011165	•DRY50 LINEAR FLAT 70 chrome		
544011042	•DRY50 LINEAR FLAT 70 squares		
544011073	•DRY50 LINEAR FLAT 80 steel	80 cm	1,5 x 2 m
544011103	•DRY50 LINEAR FLAT 80 chrome		
544011059	•DRY50 LINEAR FLAT 80 squares		
544011080	•DRY50 LINEAR FLAT 90 steel	90 cm	1,5 x 2 m
544011172	•DRY50 LINEAR FLAT 90 chrome		
544011141	•DRY50 LINEAR FLAT 90 squares		
544011097	*DRY50 LINEAR FLAT 100 steel	100 cm	1,5 x 2 m
544011189	*DRY50 LINEAR FLAT 100 chrome		
544011134	*DRY50 LINEAR FLAT 100 squares		
544011127	*DRY50 LINEAR FLAT 120 steel	120 cm	1,5 x 2 m
544012513	*DRY50 LINEAR FLAT 120 chrome		
544011158	*DRY50 LINEAR FLAT 120 squares		

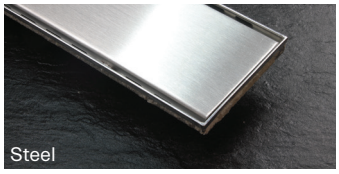

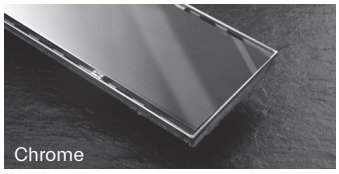

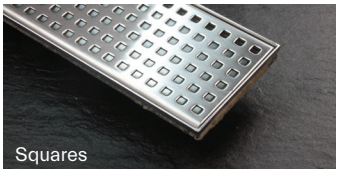

DRY50 LINEAR FLAT
TECHNICAL DATA SHEET

revestech®

CHANNEL AND GRIDS MEASURES

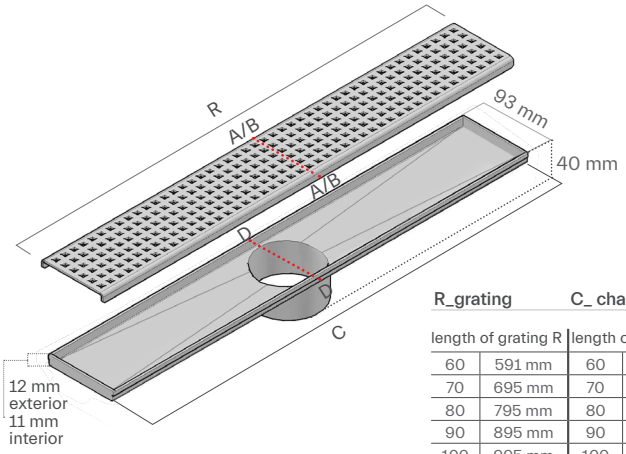

R_grating		C_ channel	
length of grating R		length of channels C	
60	591 mm	60	596 mm
70	695 mm	70	700 mm
80	795 mm	80	800 mm
90	895 mm	90	900 mm
100	995 mm	100	1000 mm
120	1195 mm	120	1200 mm

A/A _flat grating (Steel / Chrome)

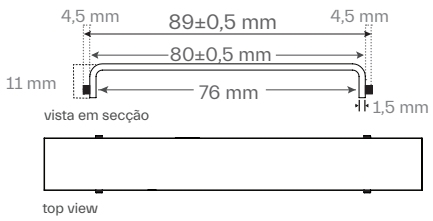

B/B_perforated grating (Squares)

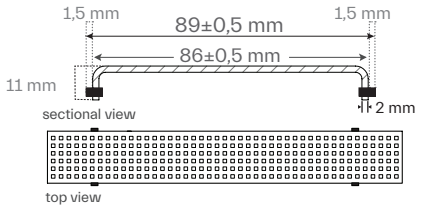

D/D_channel base

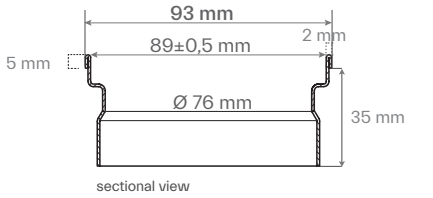

revestech®
C/La Rioja,4
03006
Alicante
Spain

responsible waterproofing